THE OP-AMP ABSTRACTION

OPERATIONAL AMPLIFIER

prepared by:

Gyro A. Madrona

Electronics Engineer

GRADING SYSTEM

FINAL GRADE

30%

PRELIM

30%

MIDTERM

40%

ENDTERM

TERM GRADE

50%

EXAM

50%

LABORATORY

PENALTY

0

ABSENT

3

45-min LATE

5 max

15-min LATE

TOPIC OUTLINE

Lumped Abstraction

Ideal Op-Amp

Noninverting Op-Amp

LUMPED CIRCUIT ABSTRACTION

Physics Law

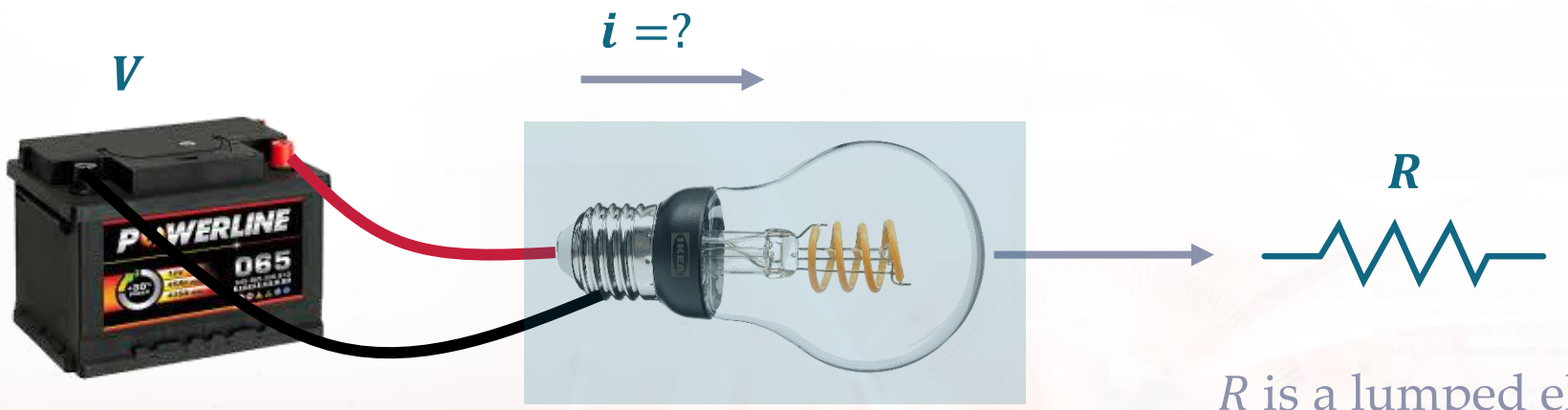

R is a lumped element **abstraction** for the bulb

Maxwell's Equation

$$\nabla \cdot E = -\frac{\partial B}{\partial t}$$

$$\nabla \cdot E = \frac{\rho}{\varepsilon_0}$$

$$\nabla \cdot J = -\frac{\partial \rho}{\partial t}$$

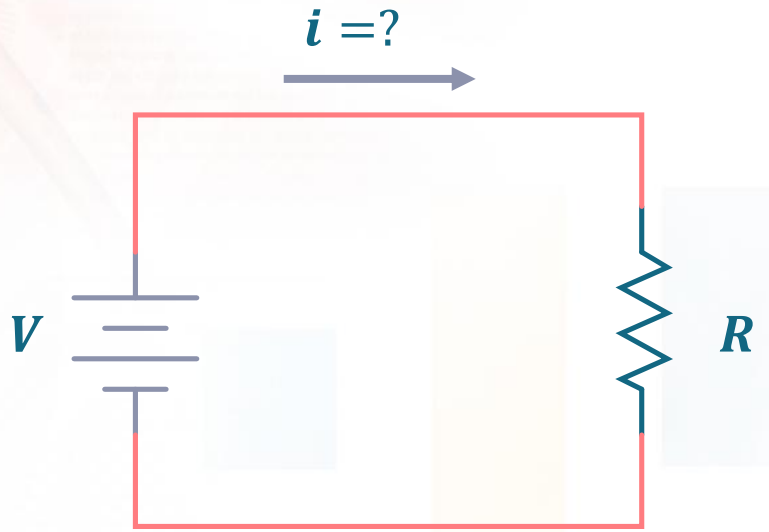

DIGITAL ABSTRACTION

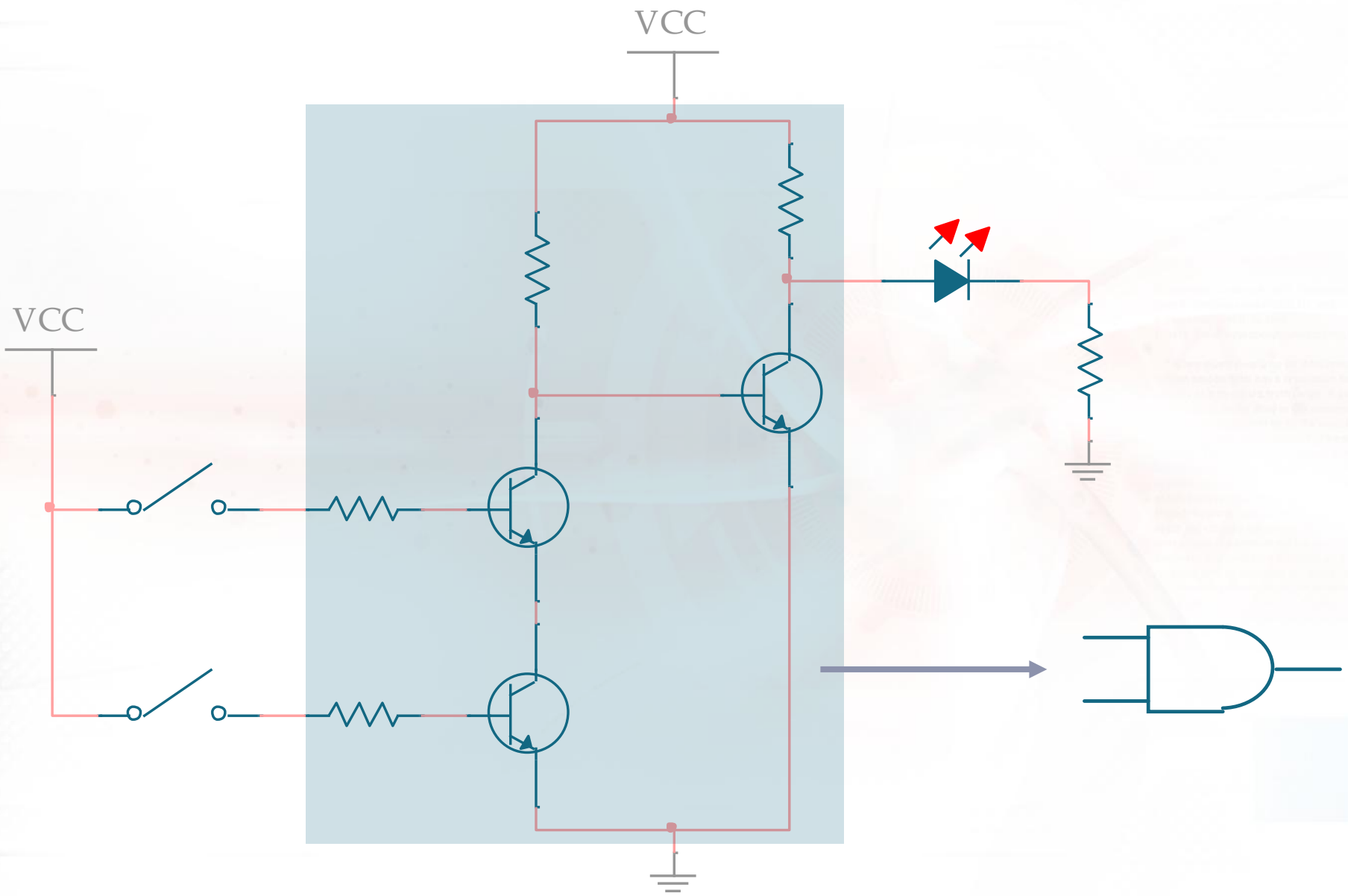

LANGUAGE ABSTRACTION

Name	Size	Packed Size
cert.c	1 438	1 536
cert.input	8 721	9 216
COPYING.LIB	25 265	25 600
crypt.c	3 405	3 584
crypt.s300.S	2 382	2 560
crypt.sparc.s	2 818	3 072
crypt.sun3.S	2 424	2 560
crypt_util.c	24 243	24 576
do_ranlib	1 087	1 536
GNUmakefile	1 504	1 536
Makefile	3 840	4 096
patchlevel.h	966	1 024
README	7 864	8 192
S2o	968	1 024
speeds.c	2 567	3 072
ufc-crypt.h	2 693	3 072
ufc.args	2	512
ufc.c	1 468	1 536

printf( )

OP-AMP ABSTRACTION

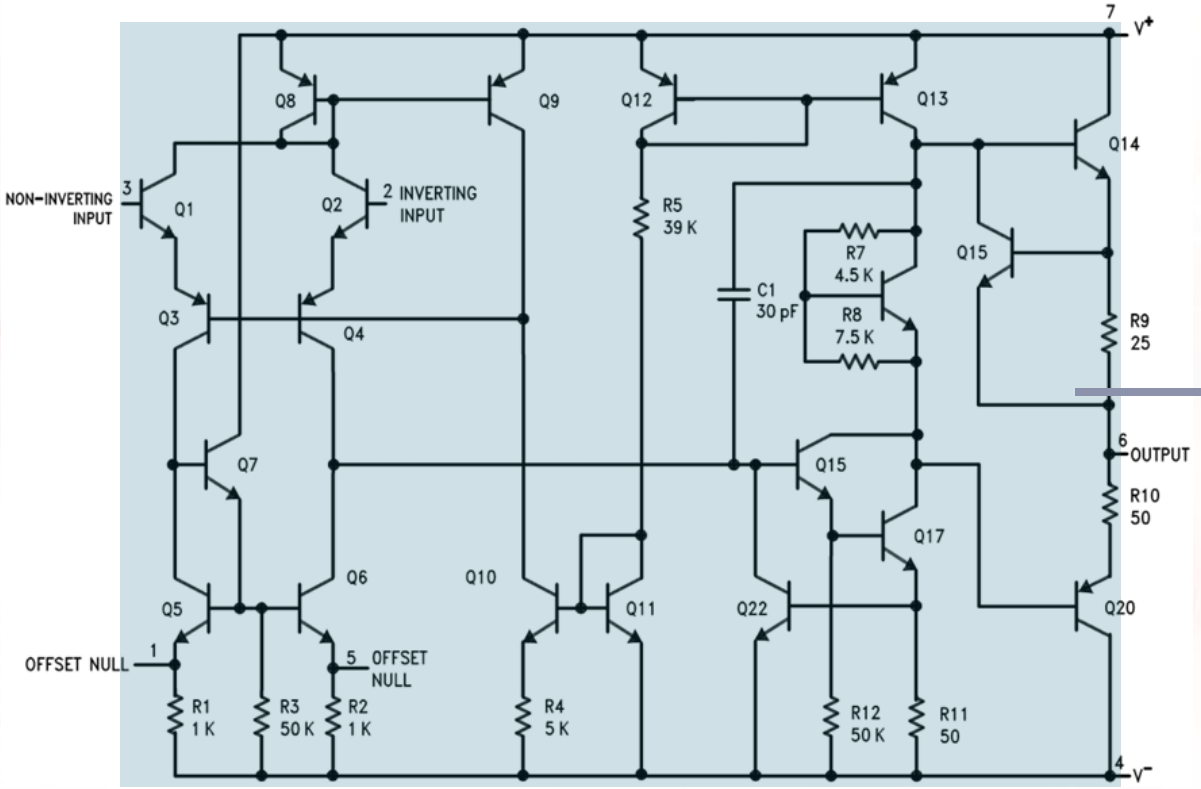

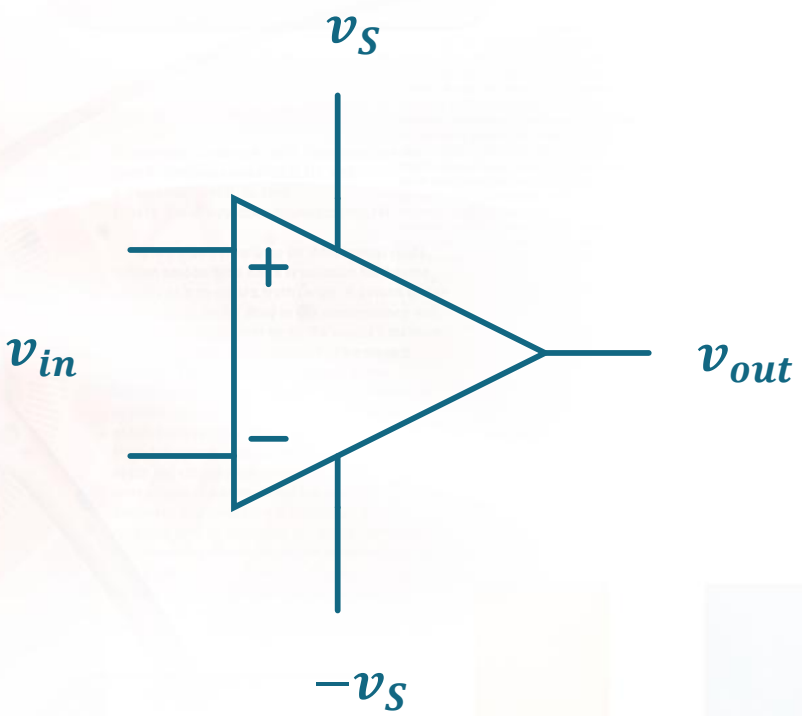

IDEAL OP-AMP

Abstract representation

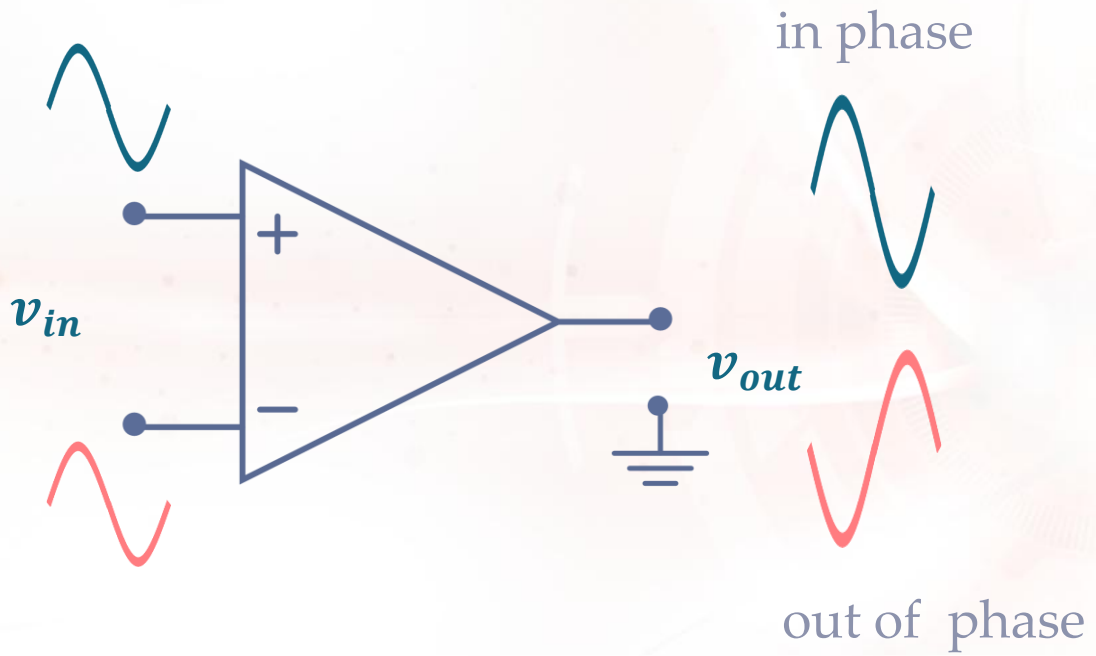

Circuit model

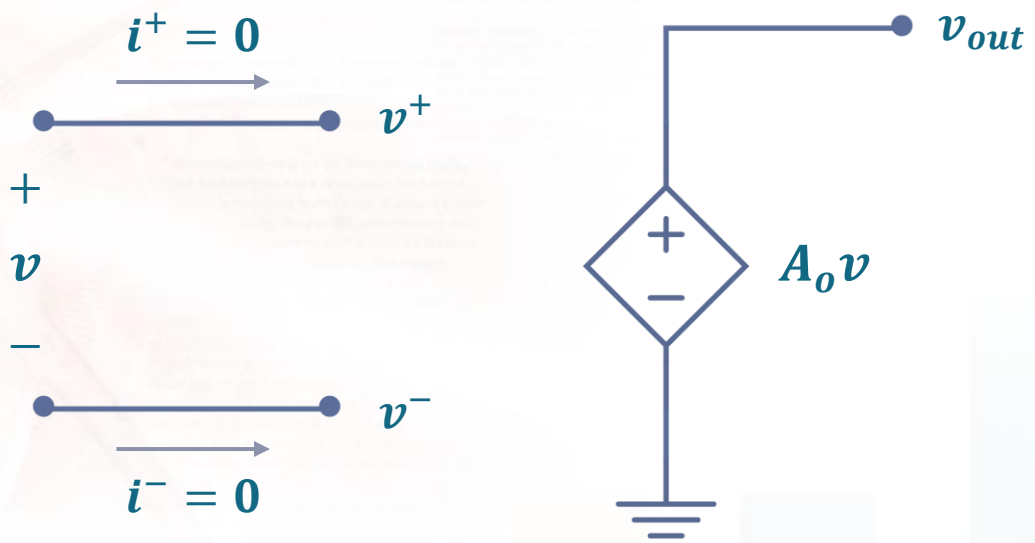

Circuit model

∞ **input** resistance

0 output resistance

Gain "A" virtually ∞

No saturation

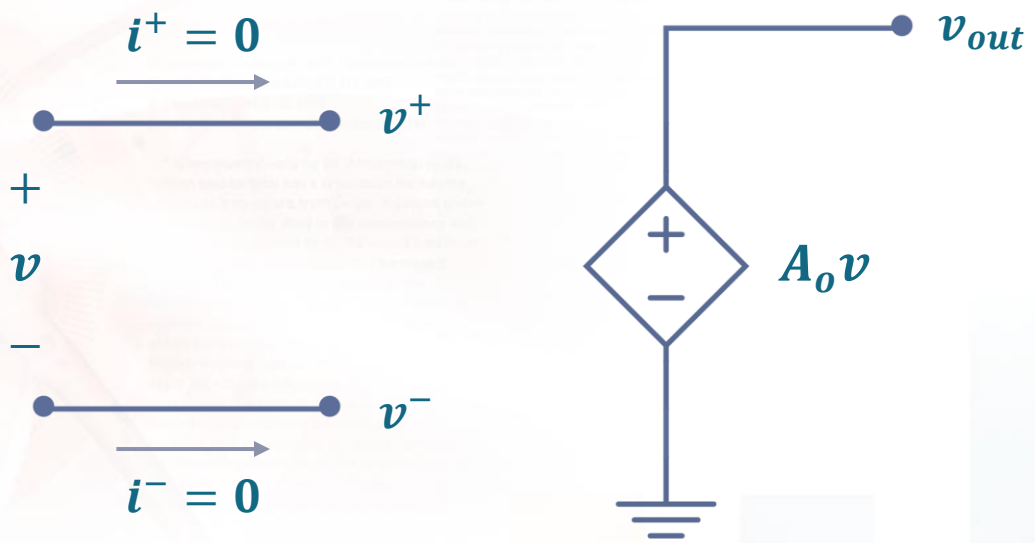

Abstract representation

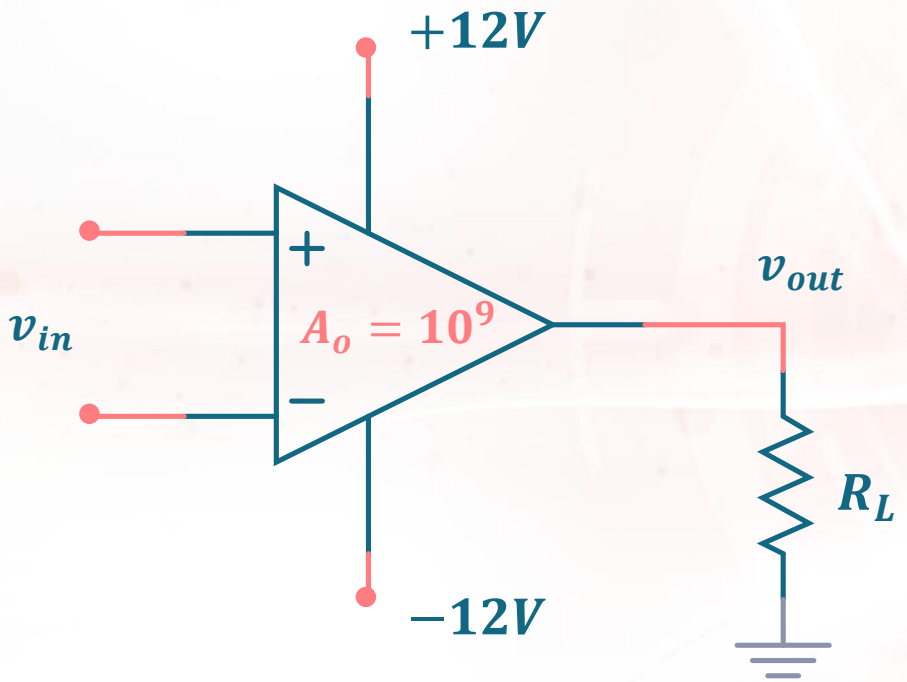

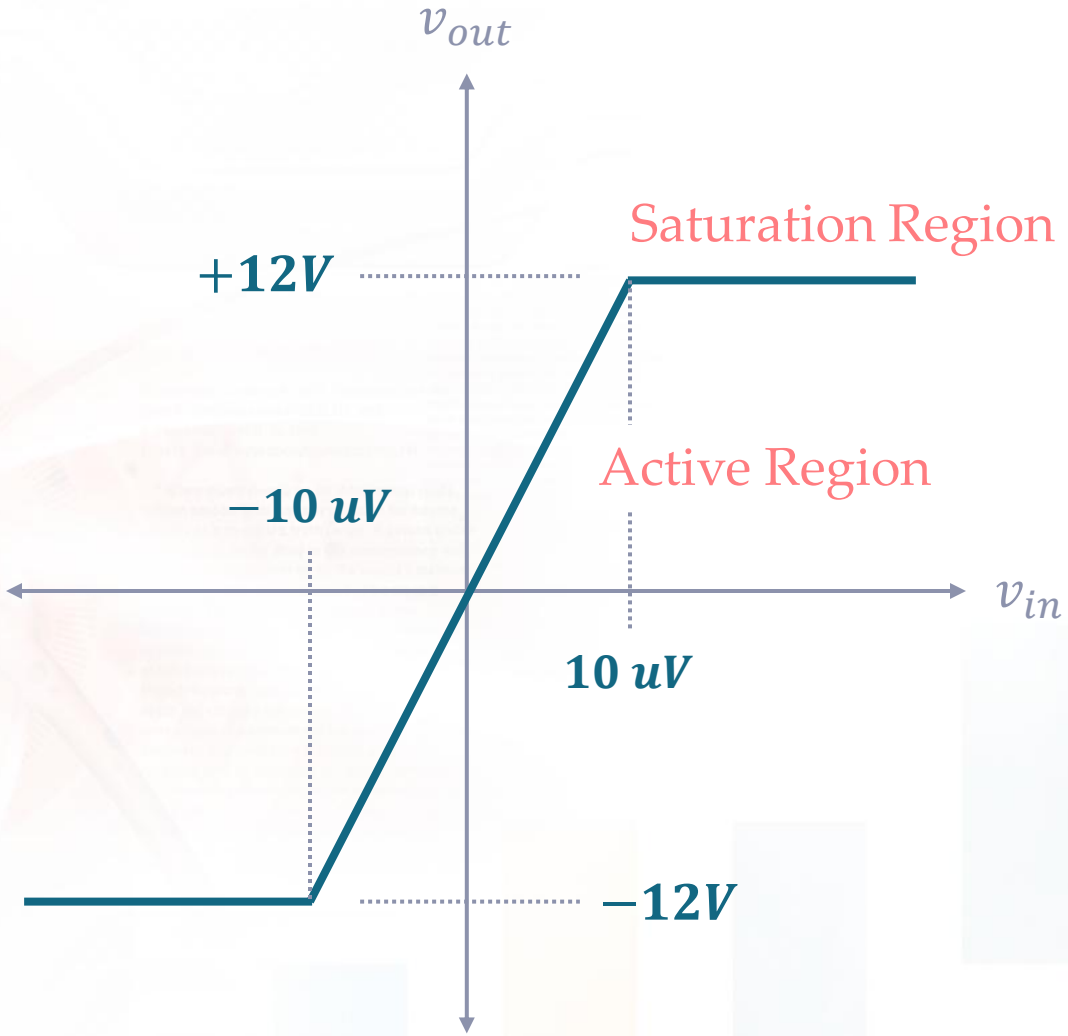

NONINVERTING OP-AMP

NONINVERTING OP-AMP

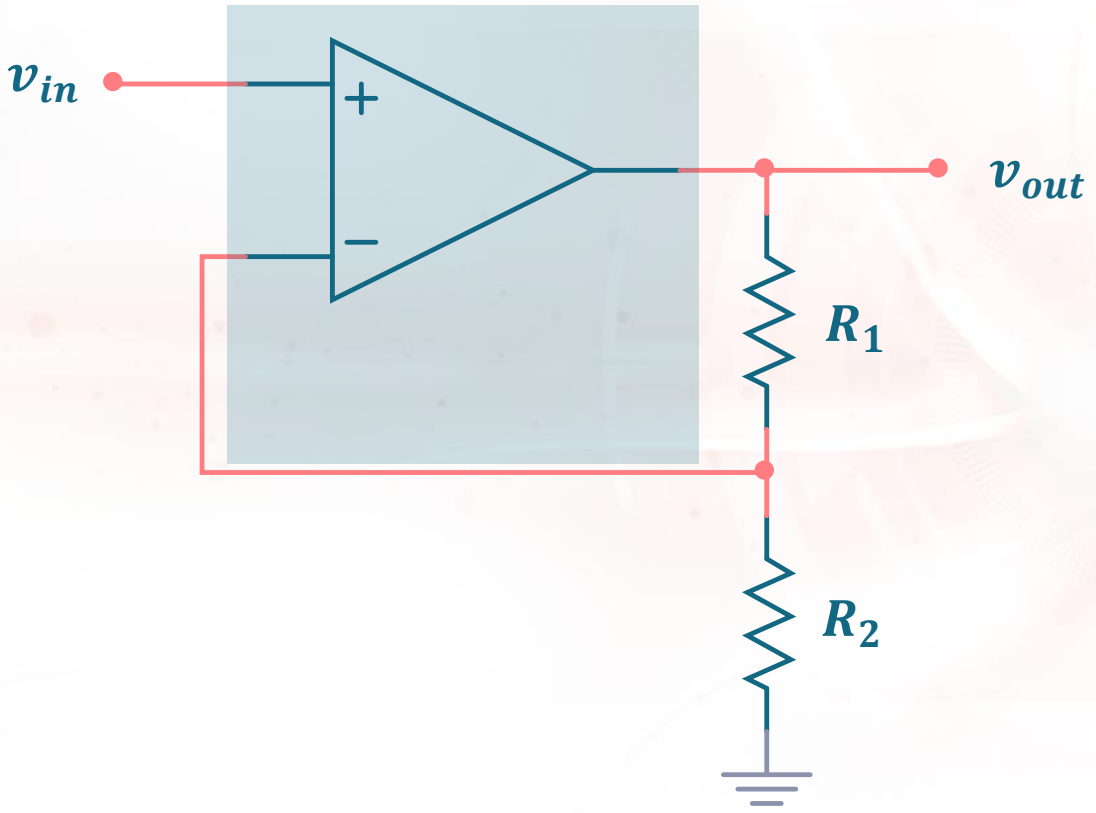

Equivalent Circuit model

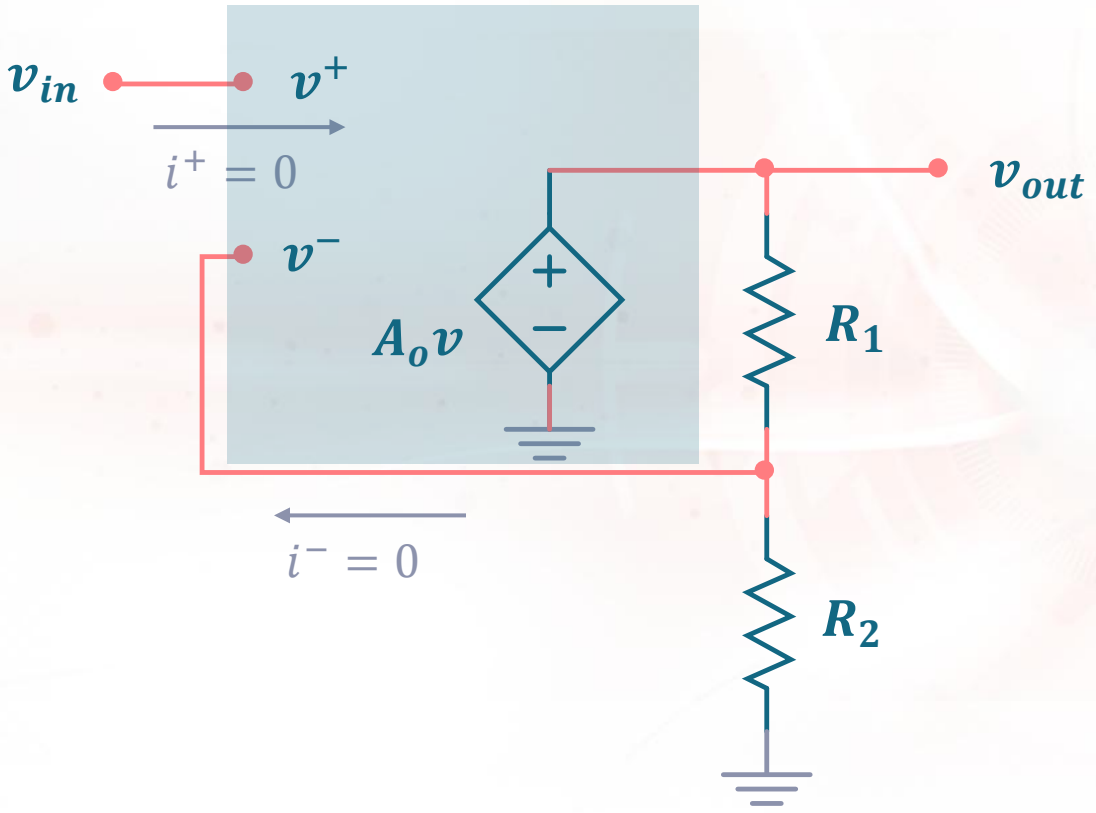

$$v_{out} = A_o v$$

$$v_{out} = A_o(v^+ - v^-)$$

$$v_{out} = A_o\left(v_{in} - v_{out}\frac{R_2}{R_1 + R_2}\right)$$

$$v_{out} + v_{out}\frac{A_o R_2}{R_1 + R_2} = A_o v_{in}$$

$$v_{out}\left(1 + \frac{A_o R_2}{R_1 + R_2}\right) = A_o v_{in}$$

Equivalent Circuit model

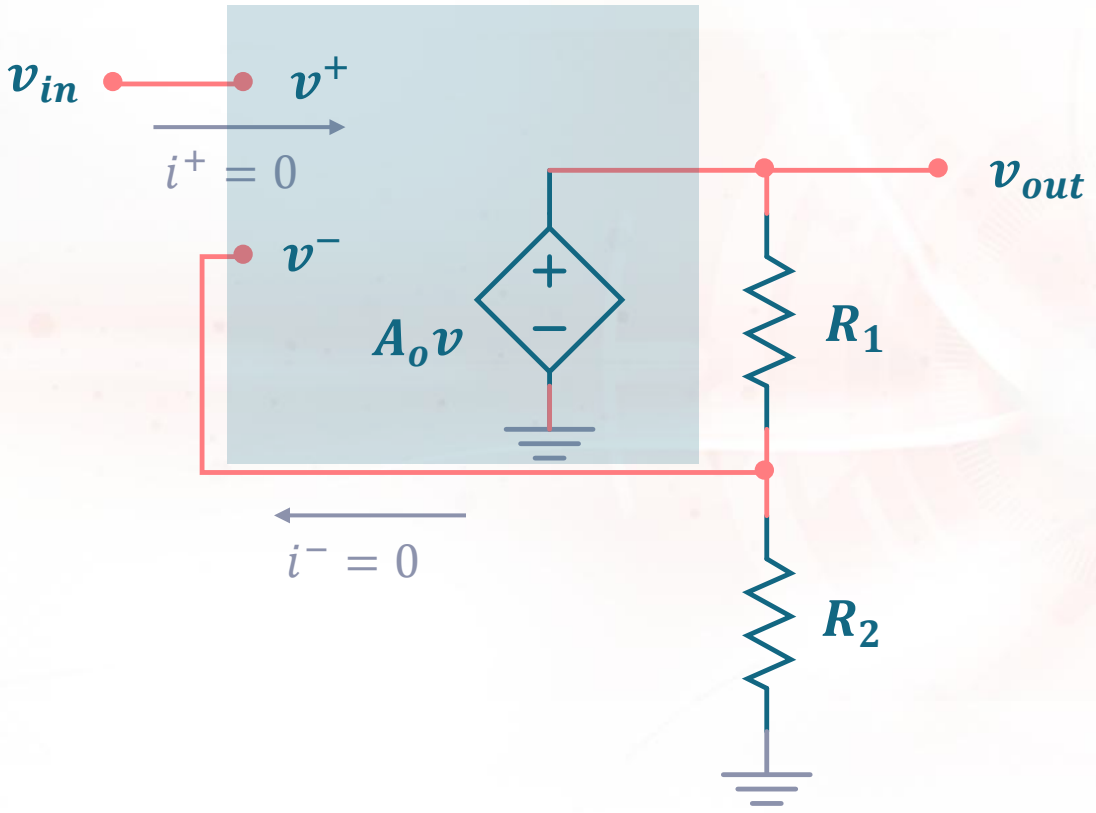

Let $A_o \approx \infty$, Open-Loop Gain

$$v_{out} = \frac{A_o v_{in}}{1 + \frac{A_o R_2}{R_1 + R_2}}$$

$$v_{out} = \frac{A_o v_{in}}{\frac{A_o R_2}{R_1 + R_2}}$$

$$v_{out} = v_{in} \frac{R_1 + R_2}{R_2}$$

$$v_{out} = v_{in} \left(\frac{R_1}{R_2} + 1 \right)$$

Closed-Loop Gain

$$A = \frac{R_1}{R_2} + 1$$

NEGATIVE FEEDBACK

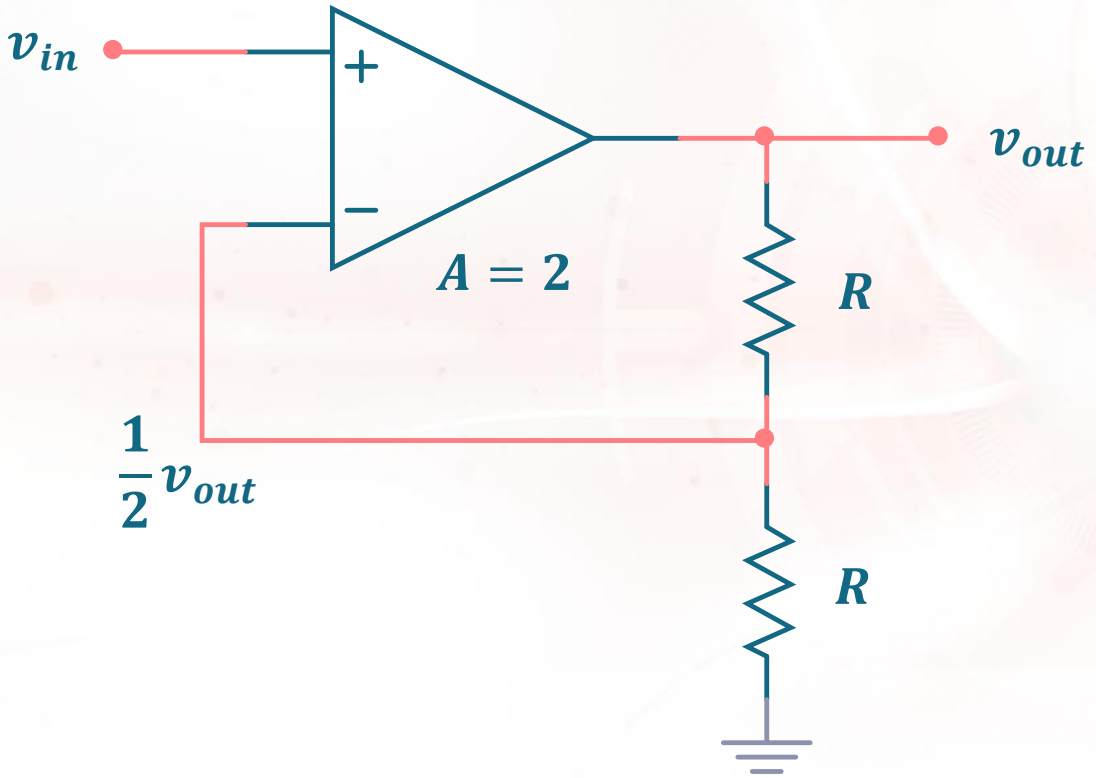

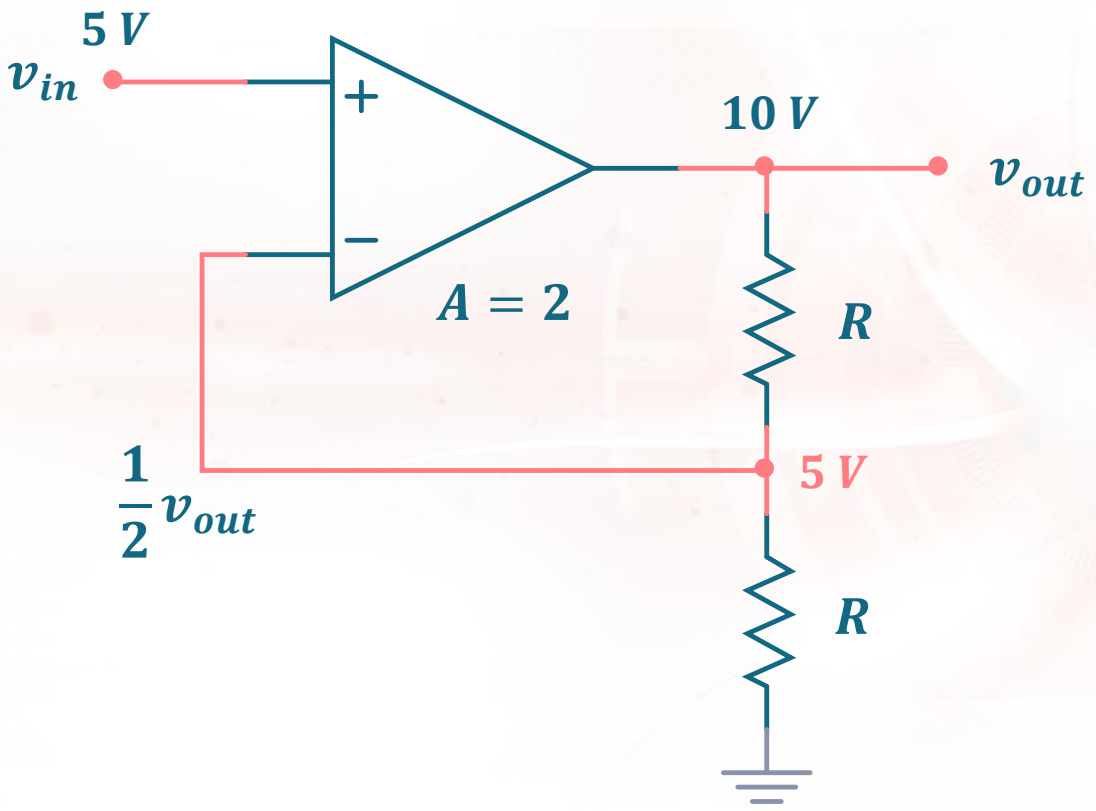

Differential Inputs

$$v = v^+ - v^-$$

$$v = 5 - 5$$

$$v = 0$$

Stable point is when $v^+ \approx v^-$

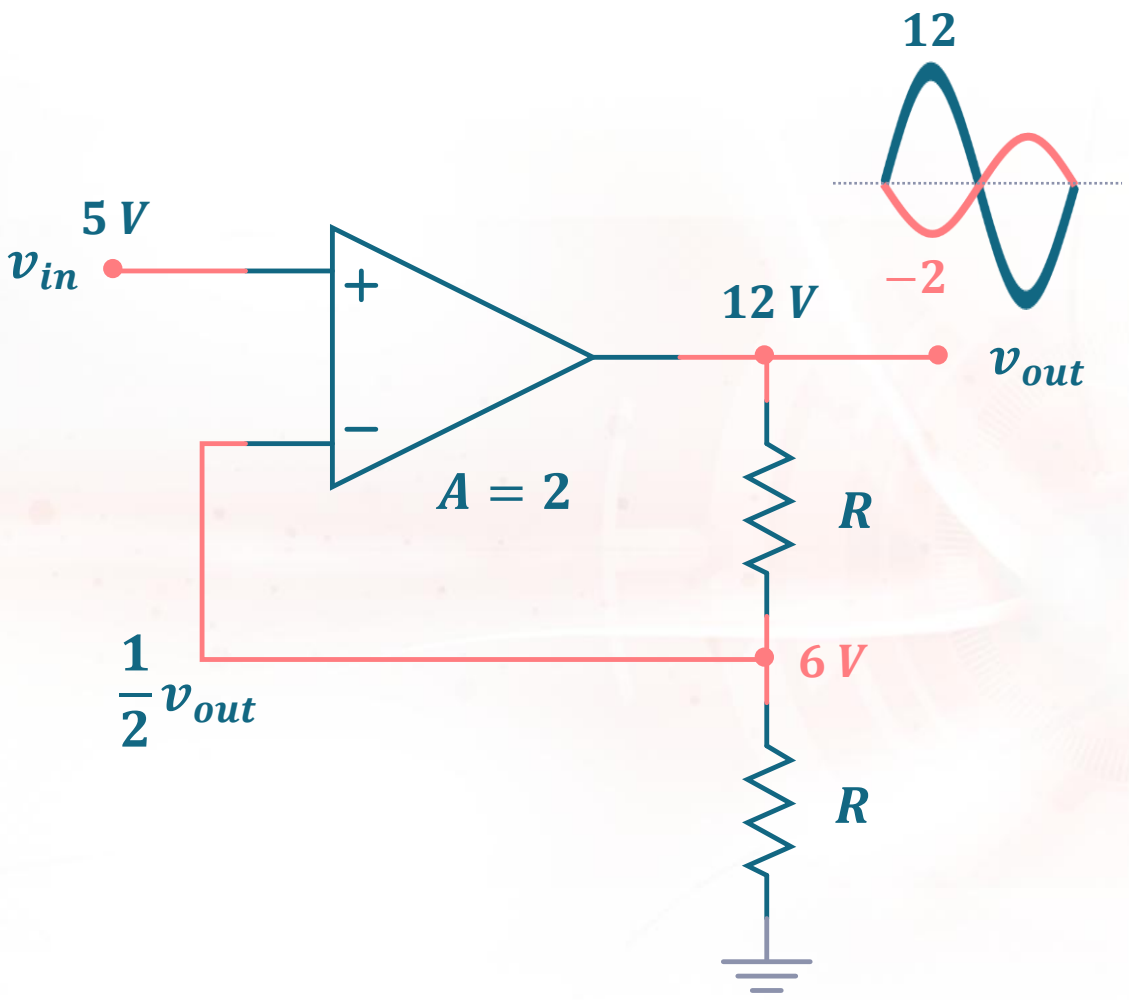

Differential Inputs

$$v = v^{+} - v^{-}$$

$$v = 5 - 6$$

$$v = -1\ V$$

Portion of output is **fed** to v^{-} input

$$v_{out} = Av$$

$$v_{out} = 2(-1)$$

$$v_{out} = -2\ V$$

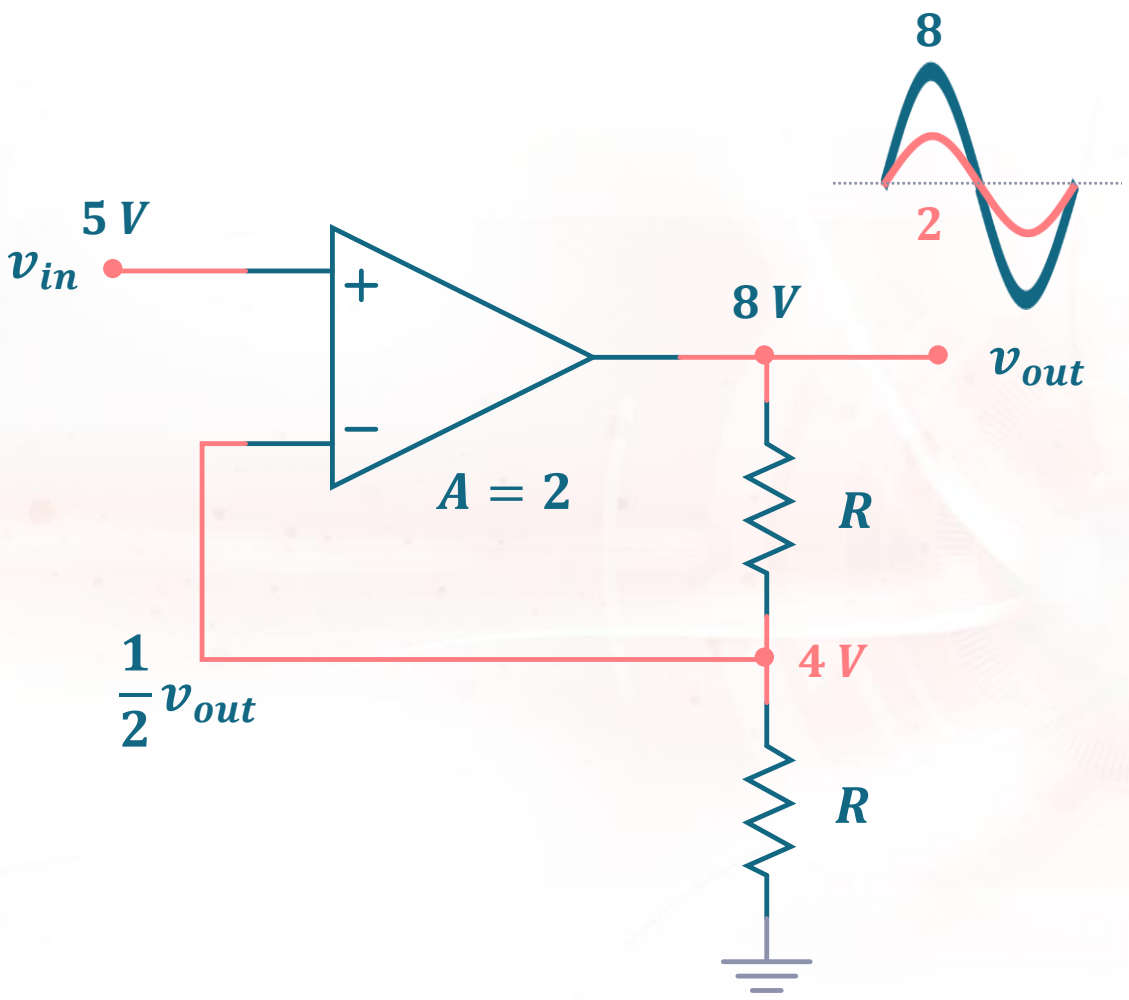

Differential Inputs

$$v = v^{+} - v^{-}$$

$$v = 5 - 4$$

$$v = 1\ V$$

Portion of output is **fed** to v^{-} input

$$v_{out} = Av$$

$$v_{out} = 2(1)$$

$$v_{out} = 2\ V$$

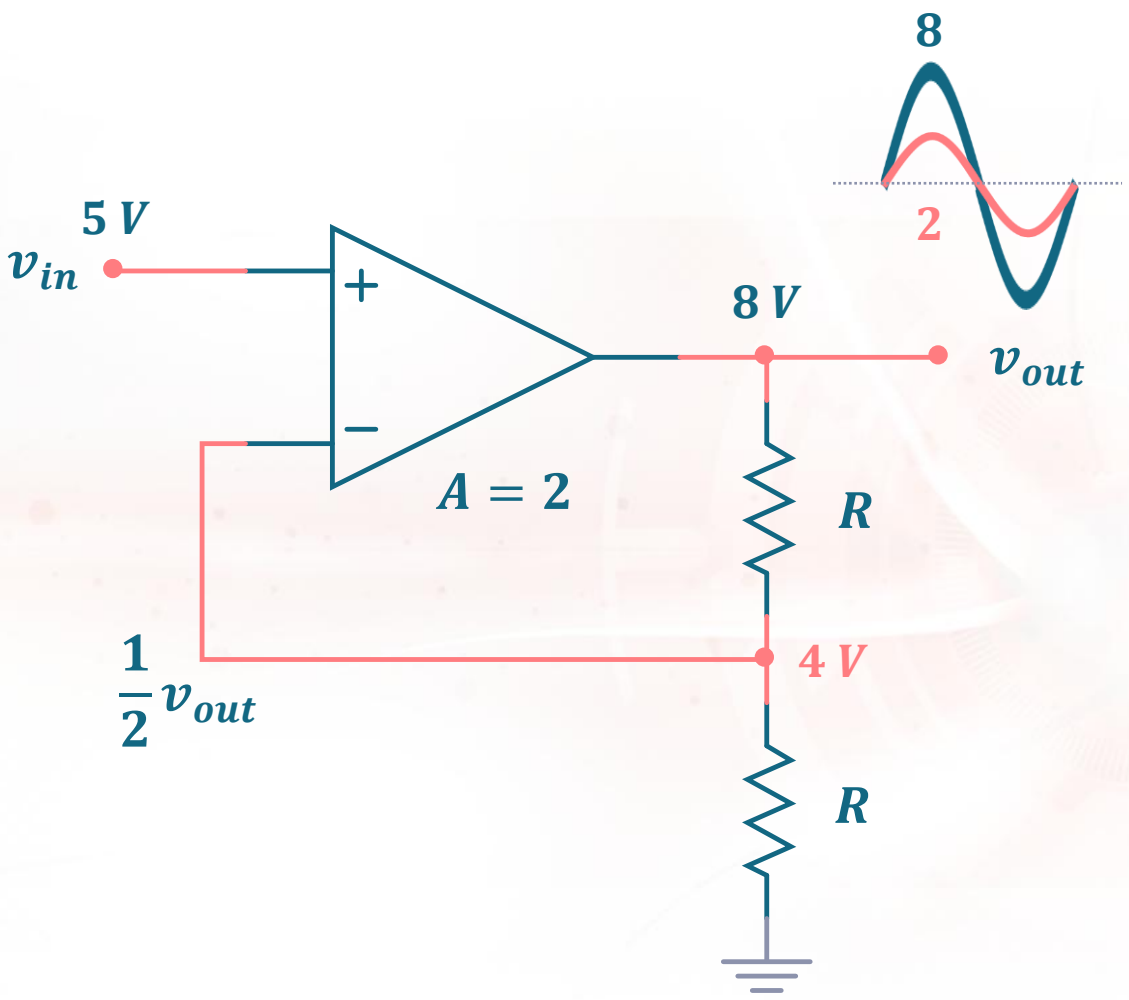

Insightful analysis

$$v^+ \approx v^-$$

$$i^+ = 0$$

$$i^- = 0$$

LABORATORY